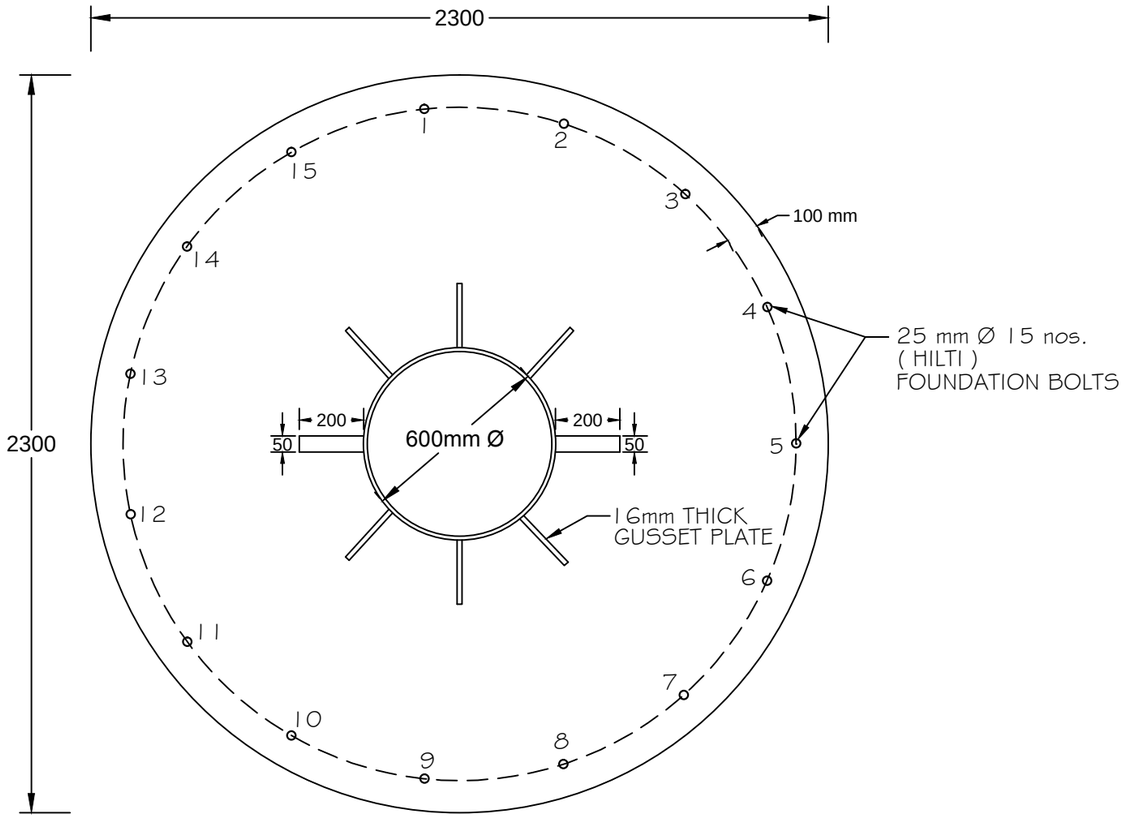

PLAN

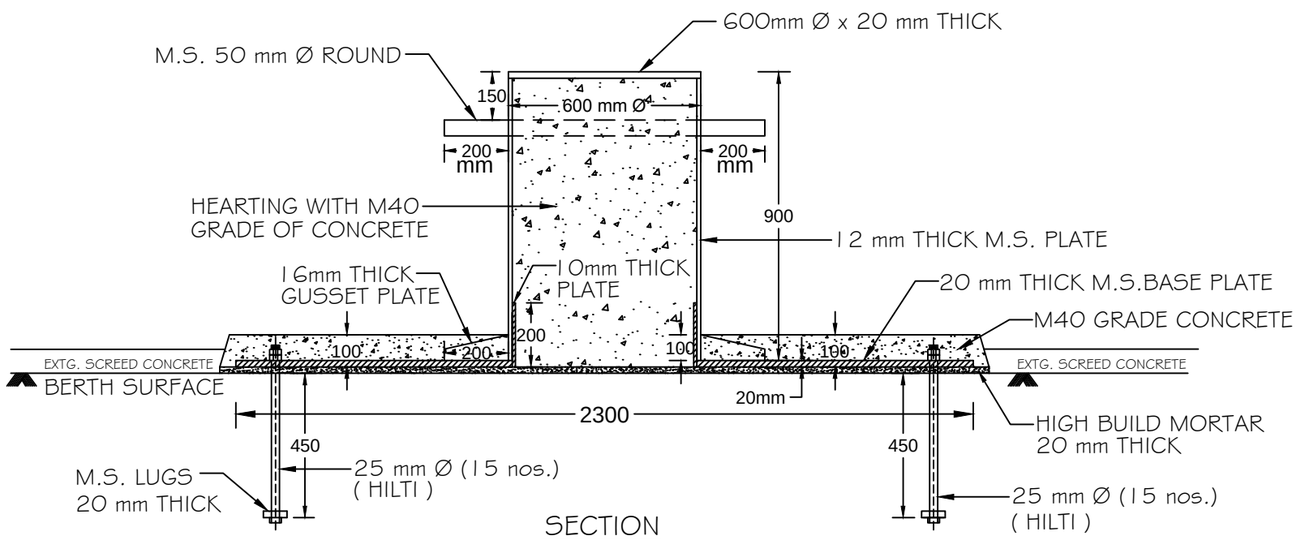

SECTION

NOTE :

1. ALL WRITTEN DIMENSIONS ARE IN MILLIMETERS UNLESS OTHERWISE SPECIFIED.

SCALE:- 1:20	MORMUGAO PORT TRUST
REVISION DATE	DRN :-
	JE-III :-
	AEN (P) :-
	XEN (P) :-
	SE (P) :-
	DY. C.E. :-
	CHIEF ENGINEER
150 TON BOLLARD AT BREAKWATER BERTH .	DATE :- 09/01/2019
	DRG. NO :- H / 858